Third angle projection

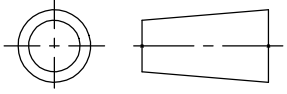

This drawing includes confidential information which is the property of ASHCROFT INC.
This copy is loaned for a specific purpose, with the understanding that it will not be reproduced or used for any other purpose or disclosed to others, and it will be returned on demand.

ASHCROFT® INC.
250 EAST MAIN STREET
STRATFORD, CT 06614

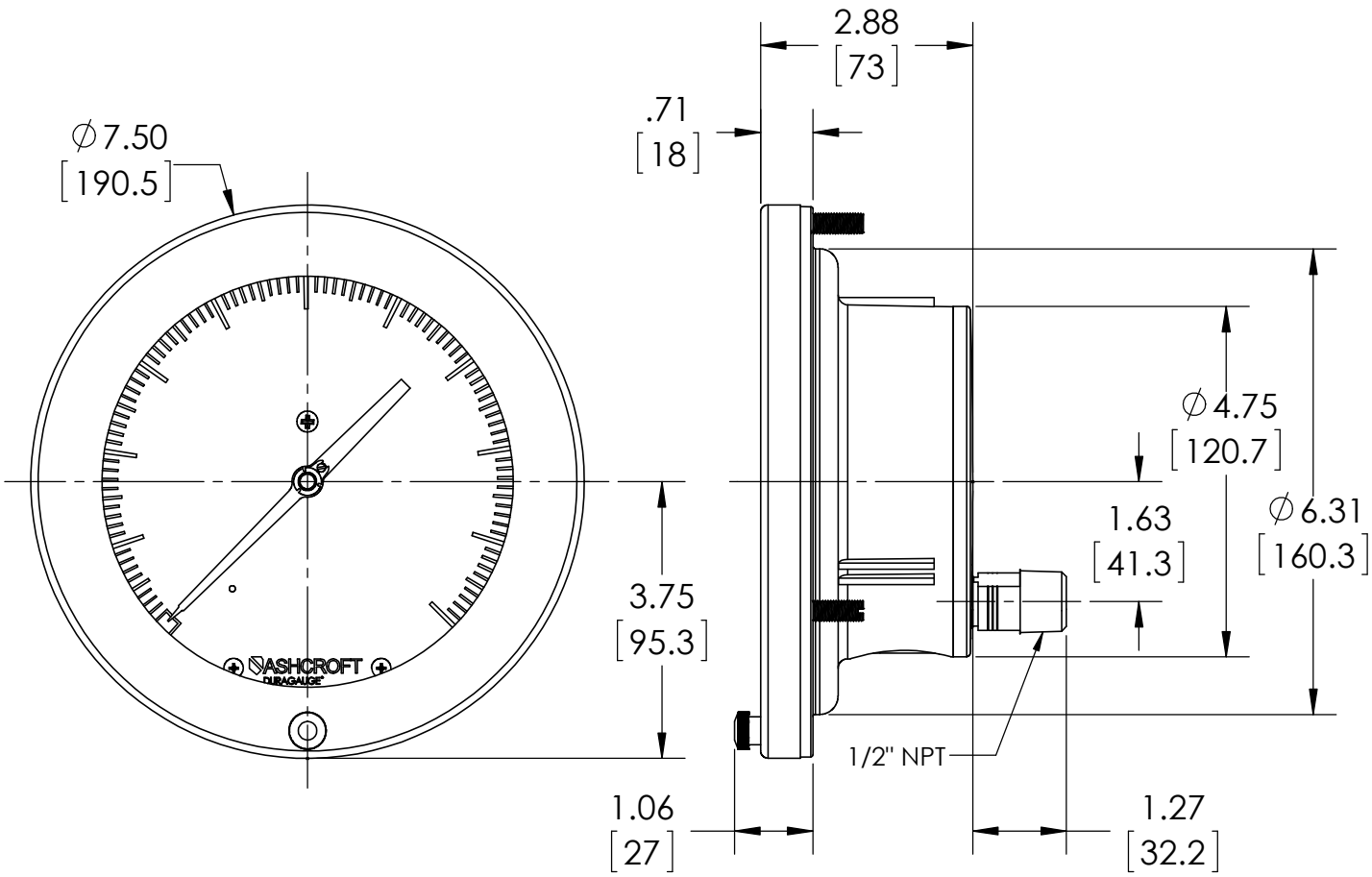

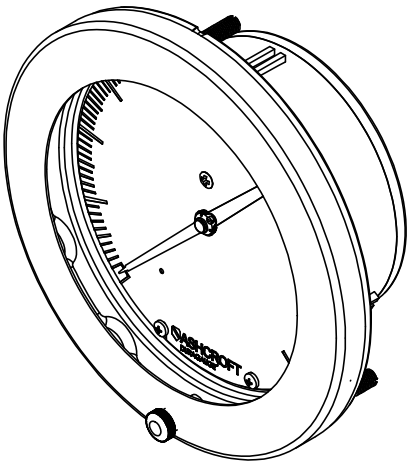

Note: 3 Mounting studs threaded equally spaced on a 7" [178] Bolt Circle.

DIMENSIONS IN [ ] ARE MILLIMETERS

REV.	ECO	DESCRIPTION	BY	DATE
A	0004455	RELEASED GENERAL DIMS. FOR 601377 04B	MJS	5/25/2010
B	0005457	Validation of Dimensions	MJS	2/17/2012

This print certified correct for		General Dimensions			
Customer's Name		60 1377 04B SERIES			
		FULSH MOUNTED DURAGAUGE			
Customer's Order No.		Drawn MJS	Date 5/25/10	Date of Issue	
Ashcroft Order No.		Checked	Date	SHEET-1	Rev.
Certified by	Date	Approved	Date	70A3020	B