Third angle projection

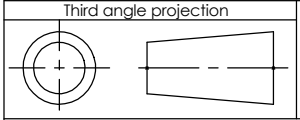

This drawing includes confidential information which is the property of ASHCROFT INC.
This copy is loaned for a specific purpose, with the understanding that it will not be reproduced or used for any other purpose or disclosed to others, and it will be returned on demand.

ASHCROFT® INC.
250 EAST MAIN STREET
STRATFORD, CT 06614

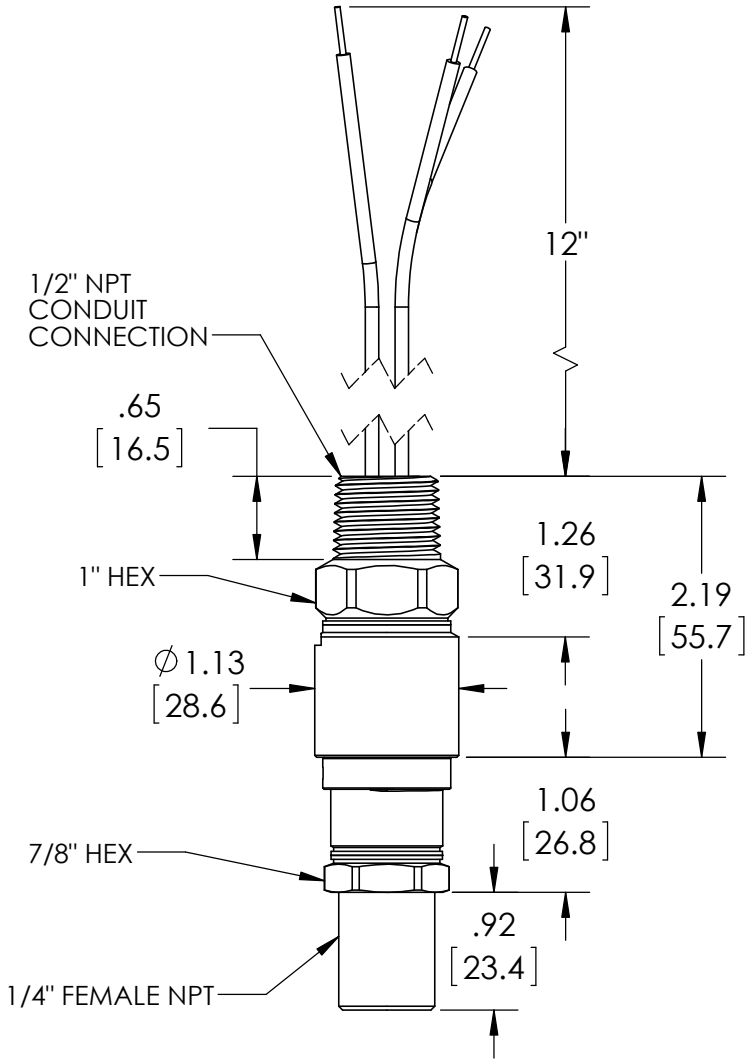

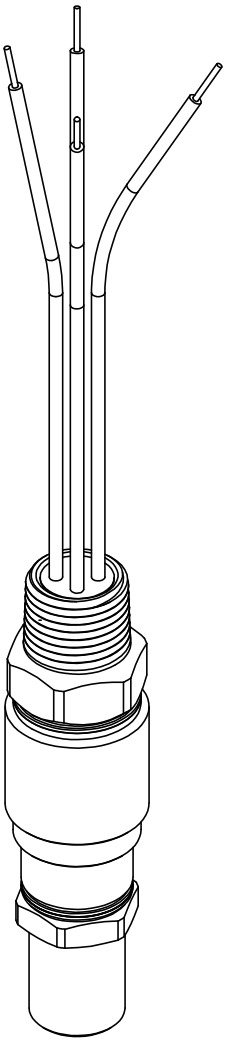

DIMENSIONS IN [ ] ARE MILLIMETERS

REV.	ECO	DESCRIPTION	BY	DATE
A	0005029	RELEASED GENERAL DIMS.	MJS	7/15/2011

This print certified correct for		General Dimensions			
Customer's Name		A-SERIES SWITCH APSN41H012C_25			
Customer's Order No.		Drawn MJS	Date 7/15/11	Date of Issue	
Ashcroft Order No.		Checked	Date	SHEET-1	Rev.
Certified by	Date	Approved	Date	70A3630	A