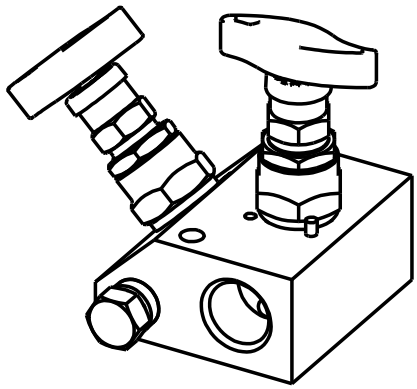

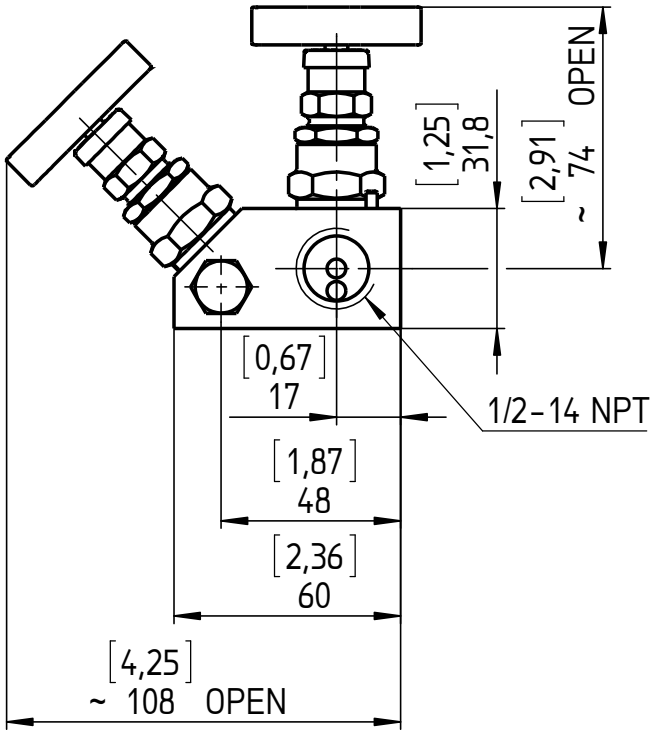


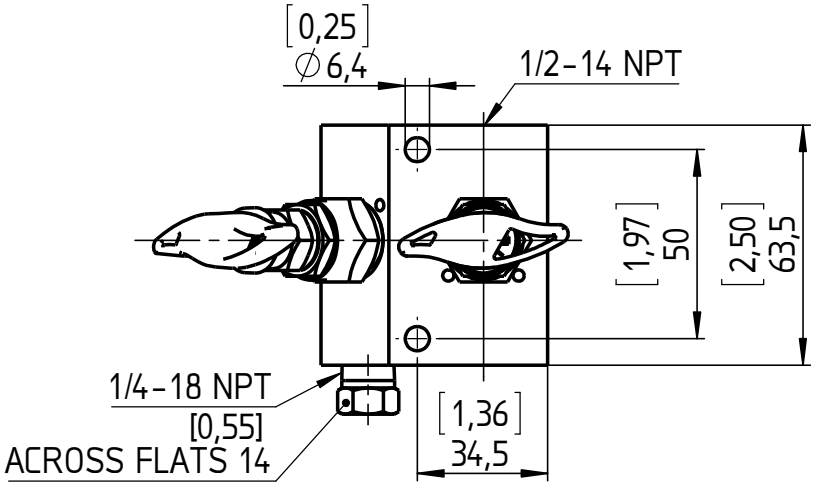


All specifications are subject to change without notice.

This drawing includes confidential information which is the property of ASHCROFT INC. This copy is loaned for a specific purpose, with the understanding that it will not be reproduced or used for any other purpose or disclosed to others, and it will be returned on demand.

| Rev. | Description | Date | Na. |
|---|---|---|---|

| | Date | Name |
|---|---|---|
| Drawn | 22.02.16 | J. Krott |
| Checked | 23.02.16 | Th. Wel |

ASHCROFT®

Dimensions in mm [inch]

# General Dimension
# Valve, V02, 2VC
1/2-14 NPT female / 1/2-14 NPT female

DWG. NO.
A 076 I 8-Valve-50-V02-2VC-50