ASHCROFT®
Trust the shield.®

1379 Duragauge® Process Gauge

Features

- Wide selection of bourdon tube materials, pressure connections and pressure ranges
- ***PLUS!***™ Performance dampens vibration, shock and pulsation effects
- Customizable dial printing options

Typical Uses

- Refineries
- Chemical and petrochemical plants
- Offshore oil rigs
- Water and wastewater pressure control
- Pulp and water
- Mining and metals
- Equipment skids
- Specialized OEM equipment
- Cryogenics

1379
4½″ shown, 6″, 8½″ dial sizes available

Specifications

Accuracy:	±0.5% of span (ASME B40.100, Grade 2A)
Sizes:	4½″, 6″, 8½″
Range:	Vacuum to 100,000 psi
Process Connection Location:	Lower, back
Process Connection Size:	¼ NPT Male, ½ NPT Male, 9⁄16 -18 UNF-2B (high pressure connection)
Case Style:	Solid front with pressure relief back
Movement:	Rotary, adjustable
Movement Materials:	400 SS, Teflon™ coated pinion gear and segment
Window Material:	Glass (STD.), acrylic window (OPT.), shatterproof glass (OPT.)
Dial:	Aluminum, white background, black pressure scale
Pointer:	Micrometer adjustable, aluminum
Weather Protection:	Dry case: Case not sealed, recommend for weather protected environment only Liquid filled or field fillable: IP66 or NEMA 4X Hermetically sealed: IP66
Dampening Options:	Liquid: glycerin, silicone, Halocarbon®, ***PLUS!***™ Performance
Mounting:	Stem, surface, flush
Approvals:	CE, CRN

Wetted Components

Bourdon Tube	Process Connection Materials	Joints
316L SS	316L SS	Welded
316L SS	Steel	Welded
K-Monel® 500 Tube	Monel® 400	Welded
C510 Phos. bronze	Brass	Silver brazed
Iconel®	316L SS (60-1379 only)	Welded

Key Benefits

- Uncompromised standards and material integrity
- Rugged aluminum case (black epoxy coated)
- Corrosion resistance in many environments

Non-Wetted Components

Case	Ring	Back Cover
Aluminum	Polypropylene	Polycarbonate

Min/Max Temperature Limits

Version	Ambient	Process	Storage
Dry	-20 °F to 200 °F (-29 °C to 93 °C)	-20 °F to 250 °F (-29 °C to 121 °C)	-40 °F to 250 °F (-40 °C to 121 °C)
PLUS!™	-40 °F to 150 °F (-40 °C to 66 °C)	-40 °F to 200 °F (-40 °C to 93 °C)	-40 °F to 150 °F (-40 °C to 66 °C)
Glycerin fill	20 °F to 150 °F (-7 °C to 66 °C)	20 °F to 150 °F (-7 °C to 66 °C)	0 °F to 150 °F (-18 °C to 66 °C)
Silicone fill	-40 °F to 150 °F (-40 °C to 66 °C)	-40 °F to 200 °F (-40 °C to 93 °C)	-40 °F to 150 °F (-40 °C to 66 °C)
Halocarbon® fill	-40 °F to 150 °F (-40 °C to 66 °C)	-40 °F to 200 °F (-40 °C to 93 °C)	-40 °F to 150 °F (-40 °C to 66 °C)

Note: Other than discoloration of the dial and hardening of the gasketing that may occur as ambient or process temperatures exceeds 150 °F, non-liquid-filled gauges with standard glass windows, can withstand continuous operating temperatures up to 250 °F (121 °C). Liquid-filled gauges can withstand 200 °F (93 °C) but glycerin fill and acrylic window will tend to yellow. Accuracy at temperatures above or below the reference ambient temperature of 68 °F (20 °C) will be affected by approximately 0.4% per 25°F. Gauges with welded joints will withstand 750 °F (400 °C), 450 °F (232 °C) with silver brazed joints for short times without rupture, although other parts of the gauge will be destroyed and calibration will be lost. For continuous use and for process or ambient temperatures above 250 °F (121 °C), a diaphragm seal or capillary or siphon is recommended.

Contact Us
1.800.328.8258
ashcroft.com

All specifications are subject to change without notice. All sales subject to standard terms and conditions. Ashcroft®, Duragauge®, DuraVis™, ***Plus!***™, Trust the Shield® are trademarks and Gold Service℠ is a service mark of Ashcroft Inc.
The following non-Ashcroft trademarks are the property of their respective owners: Halocarbon®, Inconel®, Monel®, Teflon™, Krytox™.
For more information, see Ashcroft Brands & Trademarks ©2026 Ashcroft Inc. 1379_gauge_ds_RevN_06-Mar-26

ASHCROFT®
Trust the shield.®

1379 Duragauge® Process Gauge

Ordering Code Example:	451379	S	SH	04	L	XLL	15#
Dial Size/Model Code							
451379 - 4½″ aluminum case, solid front	451379						
601379 - 6″ aluminum case, solid front							
851379 - 8½″ aluminum case, solid front							
System (tube and process connection)							
A - Bronze tube, brass process connection, max. pressure connection 1,000 psi							
P - K-Monel® 500 tube, Monel® 400 process connection, max. pressure 30,000 psi							
R - 316L SS tube, steel process connection, Max. pressure 30,000 psi (4½″ case design only)							
S - 316 SS tube, 316L SS process connection, Max. pressure 30,000 psi		S					
WW - Inconel® 718 tube, Inconel 718 process connection (6″ Case Design only. 40,000 to 100,00 psi ranges. N/A in S case design)							
Case Design (ranges 50,000 PSI - 100,000 PSI must select case design SH or SL)							
S - Solid front case, dry							
SH - Solid front case, dry, sealed, hermetically sealed, n/a 8½″ size)			SH				
SL - Solid front case, liquid filled (glycerin std., n/a 8½″ size)							
Process Connection Sizes							
02 - ¼ NPT Male, N/A for ranges over 20,000 psi				04			
04 - ½ NPT Male, N/A for ranges over 20,000 psi							
09 - 9⁄16 18 UNF-2B, high pressure fitting, standard for pressures over 20,000 psi							
AM - AND 10050-4 (¼ tubing connection)							
RW - SAE 7⁄16-20 Straight thread							
Process Connection Location							
L - Lower					L		
B - Back							
D - Side (3 o'clock)							
E - Side connection (9 o'clock)							
T - Top connection							
Options (If choosing and option(s) must include an X. Two character option codes will follow in order as indicated below)							
Dampening						X__	
GV - Silicone case fill							
GX - Halocarbon® case fill							
LL - ***PLUS!***™ Performance							
ND - ***PLUS!***™ Performance, silicone free (glycerin and silicone filled gauges)							
NZ - ***PLUS!***™ Performance silicone free (dry gauge)							
TS - Throttle screws – Brass, SS & Monel® (If orifice not specified a 0.020″ size throttle screw will be supplied)							
Case/Ring							
BF - Surface mount bracket (8½″ case size only)							
FP - Fungus proof case							
OC - Orange case							
TM - 2″ Pipe mounting bracket (4½″ dial size only)							
YC - Yellow case							
56 - Black - Type 1278M (4½″ & 6″ case size only)							
57 - Polished stainless steel - Type 1278MC (4½″ & 6″ dial size only)							
Bourdon Tube System Assemblies							
OS - Overload stop							
PR - Receiver gauge 3-15 psi							
TB - Tip bleed (S Tube only, 20,000 psi max. Not available liquid filled or hermetically sealed)							
TR - Tons on ram gauge (Includes throttle screw, slotted link, and special dial)							
VS - Underload stop							

Contact Us
1.800.328.8258
ashcroft.com

All specifications are subject to change without notice. All sales subject to standard terms and conditions. Ashcroft®, Duragauge®, DuraVis™, ***Plus!***™, Trust the Shield® are trademarks and Gold Service℠ is a service mark of Ashcroft Inc.
The following non-Ashcroft trademarks are the property of their respective owners: Halocarbon®, Inconel®, Monel®, Teflon™, Krytox™.
For more information, see Ashcroft Brands & Trademarks ©2026 Ashcroft Inc. 1379_gauge_ds_RevN_06-Mar-26

ASHCROFT®
Trust the shield.®

1379 Duragauge® Process Gauge

Ordering Code (continued)	Example:	451379	S	SH	04	L	XLL	15#
Movement/Linkage								
RJ - Slotted link; Sudden increase. Gauge accuracy is 1% with a slotted link. Slotted link not available with the ***PLUS!***™ option)								
VY - Krytox™ lubricated movement (Silicone Free) - If order specifices only slotted link the "sudden decrease" version will be supplied as standard. Gauge accuracy is 1% with a slotted link. Slotted link not available with the ***PLUS!***™ Option (XLL)								
S4 - Slotted link; Sudden decrease - If order specifiies only slotted link the "sudden decrease" version will be supplied as standard. Gauge accuracy is 1% with a slotted link. Slotted link not available with the ***PLUS!***™ Option (XLL)								
Window/Pointer								
EP - Maximum pointer, adjustable (NA with liquid filled gauge or with safety glass) (N/A with EO and EQ options)								
EO - Red set hand, adjustable (NA with liquid filled gauge or with safety glass) (N/A with EP or EQ options)								
EQ - Minimum pointer, adjustable (NA with liquid filled gauge or with safety glass) (N/A with EP or EO options)								
NG - Non-glare glass								
PD - Acrylic window (Standard with liquid filled case. Standard with EP, EO and EQ options)								
SG - Safety glass								
SH - Red set hand, stationary, single								
SJ - Red set hand, stationary, double								
E6 - Dial stop pin 6 o'clock								
Marking/Tagging								
DA - Dial marking - text marking on dial								
MN - Stainless steel tag bonded to case								
NH - Stainless steel tag wired to case								
NN - Paper tag bonded to case								
Testing/Certificates/Calibration								
C3 - Material Certificate per EN 10204 3.1 (316SS and Monel® systems only)								
C4 - Traceable calibration certificate								
AB - Gauges calibrated to compensate for absolute pressure								
HY - Hydrostatic/Pneumatic testing system pressurized to 150% of rated system pressure for 5 minutes. Overload stop standard.								
ML - Mass spectrometer leak test								
MQ - Positive material identification (PMI)								
WO - Western Origin for wetted material (C3 also must be ordered) place after C4 and before W2								
W2 - Dye penetrant of bourdon tube								
Special Cleaning								
MF - Mercury Free Gauges Per Spec ABP317 - Certificate of Conformance to specifications and/or drawings free from mercury contamination (CD-2) furnished at no additional charge								
6A - Gauges dried to remove residual moisture after calibration								
6B - Oxygen service (Cleaned for Gaseous Oxygen or other Strong Oxidizing Agents) (CD-1A must be ordered to receive certificate) - If liquid filled case required, include GX Variation for Halocarbon Filling - S&P tube and socket only - Not available on ranges greater than 10,000 psi. - Gauge furnished with acrylic window, shatterproof glass (XSG) optional Oxygen cleaned to ASME B40.100 level IV								
6W - Cleaned for oxidizing processes other than oxygen (CD-1A must be ordered to receive certificate) - Not available on ranges greater than 10,000 psi - Oxygen cleaned to ASME B40.100 level IV								
Special Dials								
D3 - DuraVis™ retroreflective dial								
T1 - Test gauge dial and pointer (liquid filled case not available, only 15 psi and above)								

All specifications are subject to change without notice. All sales subject to standard terms and conditions. Ashcroft®, Duragauge®, DuraVis™, ***Plus!***™, Trust the Shield® are trademarks and Gold Service℠ is a service mark of Ashcroft Inc.
The following non-Ashcroft trademarks are the property of their respective owners: Halocarbon®, Inconel®, Monel®, Teflon™, Krytox™.
For more information, see Ashcroft Brands & Trademarks ©2026 Ashcroft Inc. 1379_gauge_ds_RevN_06-Mar-26

ASHCROFT®
Trust the shield.®

1379 Duragauge® Process Gauge

Ordering Code (continued)	**Example:**	**451379**	**S**	**SH**	**04**	**L**	**XLL**	**15#**
Range (coding examples only, see range table on page 5 for all standard ranges)								
Single Scales								
15# - 15 psi								15#
1BR - 1 bar								
1KSC - 1 kilograms per sq. cm								
100KP - 100 kilopascal								
Dual Scales								
15#/BR - 15 psi inner scale, 1 bar outer scale								
1BR/# - 1 bar inner scale, 15 psi outer scale								
Testing and Certifications								
CD-1- Certificate of Conformance to specifications and/or drawings (standard)								
CD-1A - Certificate of Conformance to specifications and/or drawings (non-standard) cost per list/order								
CD-4 - Recalibration chart in accordance to ASME B40.100 accuracy traceable to N.I.S.T.								
CD-5 - Certificate of Compliance for refineries to NACE MR0103-2010 and for Oilfields (production) to NACE MRO175/ISO 15156-2009 (Gauge wetted parts must be 316SS or Monel®. (See product information page ASH/PI-60C for details.) List/Order.								
CD-6 - Typical Material Certification per EN 10204 2.2								
CD-25 - Recalibration chart (charts as received and as shipped accuracy) list/gauge								

All specifications are subject to change without notice. All sales subject to standard terms and conditions. Ashcroft®, Duragauge®, DuraVis™, ***Plus!***™, Trust the Shield® are trademarks and Gold Service℠ is a service mark of Ashcroft Inc.
The following non-Ashcroft trademarks are the property of their respective owners: Halocarbon®, Inconel®, Monel®, Teflon™, Krytox™.
For more information, see Ashcroft Brands & Trademarks ©2026 Ashcroft Inc. 1379_gauge_ds_RevN_06-Mar-26

ASHCROFT®
Trust the shield.®

1379 Duragauge® Process Gauge

Standard Pressure Ranges

	psi	bar	kPa	mPa	kg/cm²
Vacuum	30IMV	N1BR	N100KP	N1MP	N1KG
	–	N1/0.6BR	N100/60KP	0.1/0.06MP	N1/0.6KG
Compound	V/15#	–	–	–	–
	–	N1/1.5BR	N100/150KP	N0.1/0.15MP	N1/1.5KG
	V/30#	–	–	–	–
	–	N1/3BR	N100/300KP	N0.1/0.3MP	N1/3KG
	V/60#	–	–	–	–
	–	N1/5BR	N100/500KP	N0.1/.5MP	N1/5KG
	V/100#	–	–	–	–
	–	N1/9BR	N100/900KP	N0.1/.9MP	N1/9KG
Positive Pressure	15#	1BR	100KP	0.1MP	1KG
	20#	–	–	–	–
	–	1.6BR	160KP	0.16MP	1.6KG
	30#	–	–	–	–
	–	2.5BR	250KP	0.25MP	2.5KG
	60#	4BR	400KP	0.4MP	4KG
	–	6BR	600KP	0.6MP	6KG
	100#	–	–	–	–
	120#	–	–	–	–
	–	10BR	1000KP	1MP	10KG
	160#	–	–	–	–
	200#	–	–	–	–
	–	16BR	1600KP	1.6MP	16KG
	300#	–	–	–	–
	–	25BR	2500KP	2.5MP	25KG
	400#	–	–	–	–
	500#	–	–	–	–
	600#	40BR	4000KP	4MP	40KG
	800#	–	–	–	–
	–	60BR	6000KP	6MP	60KG
	1000#	–	–	–	–
	1500#	100BR	10000KP	10MP	100KG
	2000#	–	–	–	–
	–	160BR	16000KP	16MP	160KG
	3000#	–	–	–	–
	–	250BR	25000KP	25MP	250KG
	4000#	–	–	–	–
	5000#	–	–	–	–
	6000#	400BR	40000KP	40MP	400KG
	8000#	–	–	–	–
	–	600BR	60000KP	60MP	600KG
	10000#	–	–	–	–
	15000#	1000BR	100000KP	100MP	1000KG
	20000#	-	-	-	-
	-	1600BR	-	160MP	1600KG
	30000#	-	-	-	-
		2500BR	-	250MP	2500KG
	50000#	-	-	-	
	-	4000BR	-	400MP	4000KG
	80000#	-	-	-	
	-	6000BR	-	600MP	6000KG
	100000#	-	-	-	-

Contact Us
1.800.328.8258
ashcroft.com

All specifications are subject to change without notice. All sales subject to standard terms and conditions. Ashcroft®, Duragauge®, DuraVis™, ***Plus!***™, Trust the Shield® are trademarks and Gold Service℠ is a service mark of Ashcroft Inc.
The following non-Ashcroft trademarks are the property of their respective owners: Halocarbon®, Inconel®, Monel®, Teflon™, Krytox™.
For more information, see Ashcroft Brands & Trademarks ©2026 Ashcroft Inc. 1379_gauge_ds_RevN_06-Mar-26

ASHCROFT®
Trust the shield.®

1379 Duragauge® Process Gauge

Dimensions in [ ] are millimeters

For reference only, consult Ashcroft for specific dimensional drawings

Dial Size Inches	A	B	C	CC	D	E	F	G	H	J	K	L	LL	M	N	P	S	T	V	Weight (lbs)
4½	5 13/16 [148]	3⅜ [86]	4⅞ [124]		1⅝ [41]	5⅜ [137]	1½ [42]	3 15/16 [100]	⅞ [20]	1 1/16 [27]		0.218 [6]	⅛ - ½ [3] [13]			2⅛ [54]		⅝ [16]	2⅝ [67]	2.5 (Dry) 3.5 (L.F.)
6	7 9/16 [192]	3½ [89]	6⅜ [162]		1⅝ [41]	7 [178]	1½ [42]	4½ [114]	⅞ [20]	1 1/16 [27]		0.218 [6]	⅛ - ½ [3] [13]			2⅛ [54]		⅝ [16]	2⅝ [67]	3.0 (Dry) 4.0 (L.F.)
8½	10 1/16 [256]	2⅞ [73]	4¾ [121]	#10-24	1 1/16 [27]	9⅝ [244]	1⅝ [41]	6 [152]	1⅜ [35]		1 1/16 [27]		⅛ - ½ [3] [13]	9 [228]	3.19 [80.9]		11/16 [17]			4.5 (Dry)

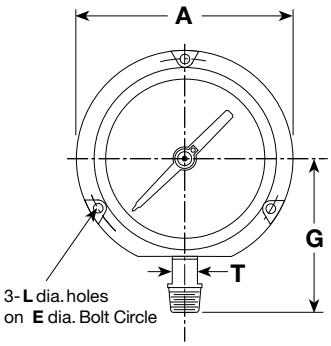

4½″ & 6″ Lower Conn.

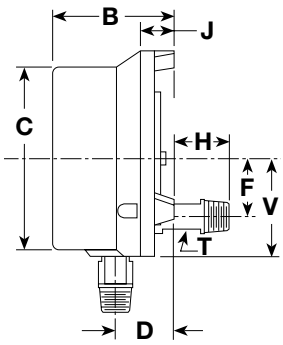

4½″ & 6″ Back Conn.

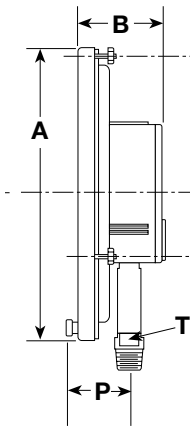

8½″ Lower Conn.

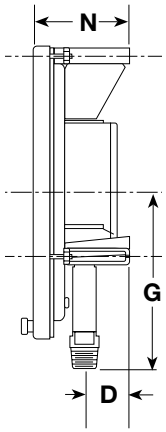

8½″ Wall Conn.

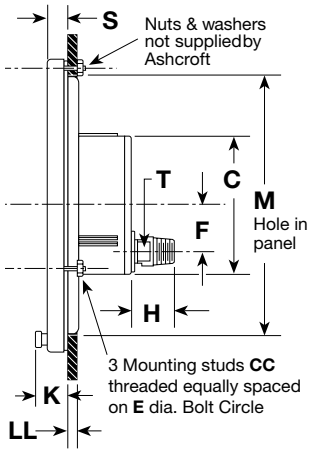

8½″ Back Conn.

Type 1278M Series Flush Mounting Ring

Used to flush mount gauge case. Standard finish in black; optional polished stainless steel finish is available.

Gauge Size Inches	Ring O.D	"A" DIA.	"B" Size of 3 Screws	"C" Size of Washers	Spacer
4½	6 [152]	5⅝ [148]	#10-24 x 1⅝	7/16 x 17/64 x ⅝	1
6	7¾ [197]	7 3/10 [185]	#¼ -20 x 1	17/94 x ½ x 1/16	1 13/32

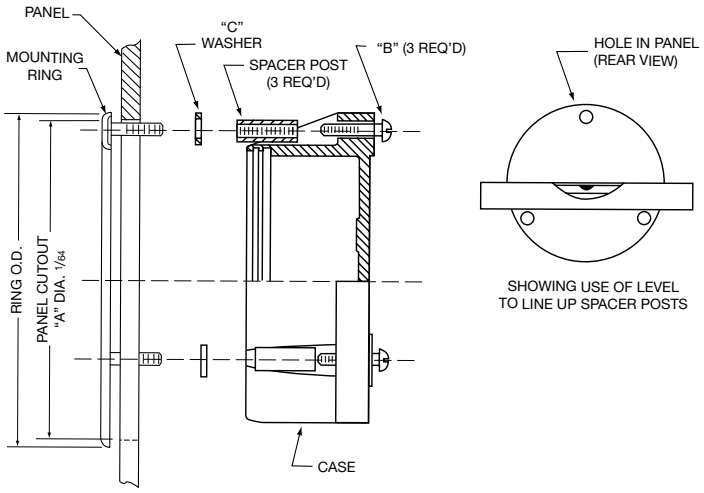

All specifications are subject to change without notice. All sales subject to standard terms and conditions. Ashcroft®, Duragauge®, DuraVis™, ***Plus!***™, Trust the Shield® are trademarks and Gold Service℠ is a service mark of Ashcroft Inc.
The following non-Ashcroft trademarks are the property of their respective owners: Halocarbon®, Inconel®, Monel®, Teflon™, Krytox™.
For more information, see Ashcroft Brands & Trademarks ©2026 Ashcroft Inc. 1379_gauge_ds_RevN_06-Mar-26